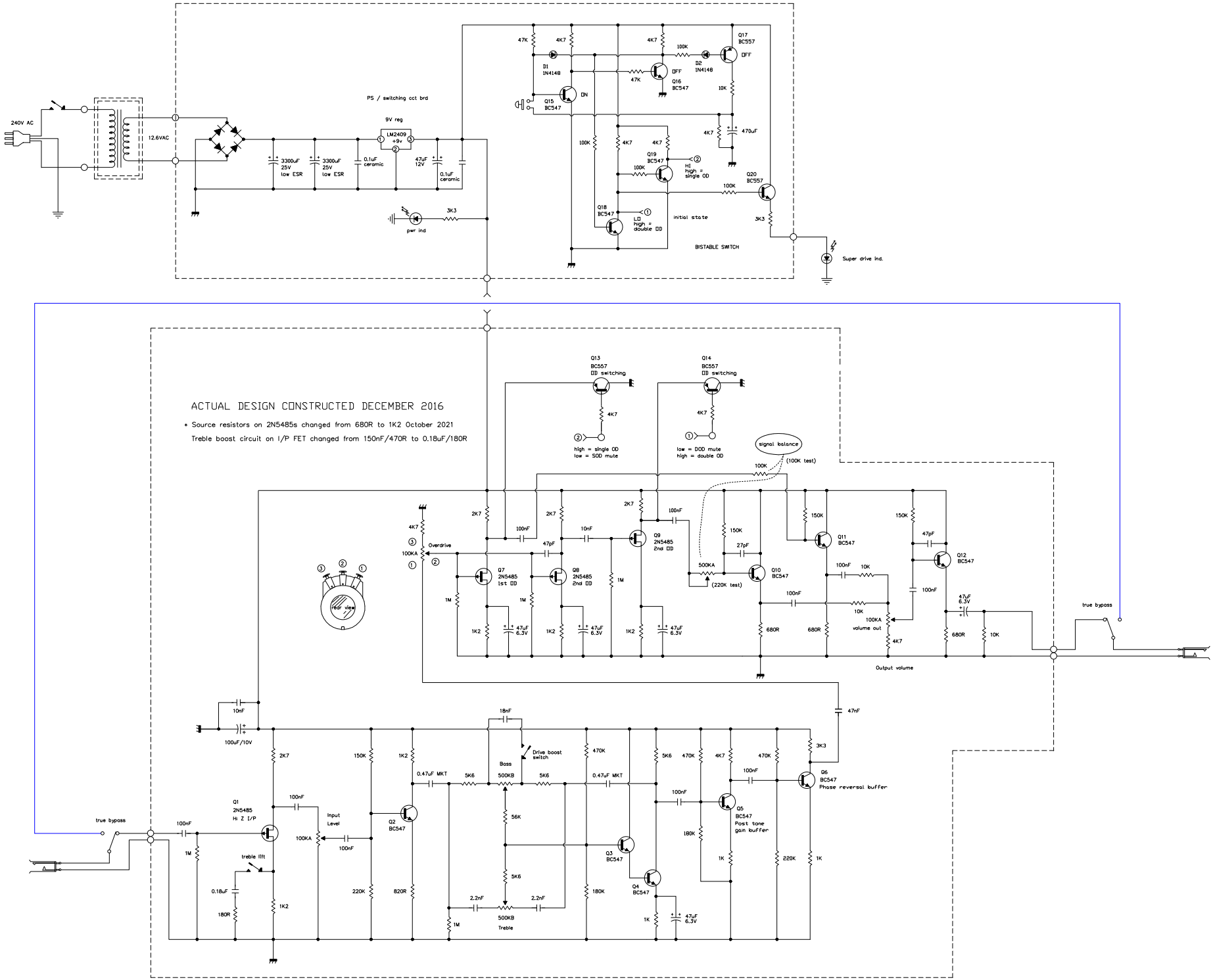
ACTUAL DESIGN CONSTRUCTED DECEMBER 2016
* Source resistors on 2N5485s changed from 680R to 1K2 October 2021
Treble boost circuit on I/P FET changed from 150nF/470R to 0.18uF/180R
240V AC
12.6VAC
PS / switching cct brd
9V reg
LM2409
+9v
3300uF 25V low ESR
3300uF 25V low ESR
0.1uF ceramic
47uF 12V
0.1uF ceramic
pwr ind
3K3
D1 1N4148
D2 1N4148
Q15 BC547
Q16 BC547
Q17 BC557
Q18 BC547
Q19 BC547
Q20 BC557
ON
OFF
OFF
HI high = single OD
LO high = double OD
initial state
BISTABLE SWITCH
Super drive ind.
Q13 BC557 OD switching
Q14 BC557 OD switching
high = single OD
low = SOD mute
low = DOD mute
high = double OD
signal balance
(100K test)
Overdrive
100KA
rear view
Q7 2N5485 1st OD
Q8 2N5485 2nd OD
Q9 2N5485 2nd OD
Q10 BC547
Q11 BC547
Q12 BC547
500KA
(220K test)
100KA volume out
Output volume
true bypass
100uF/10V
Q1 2N5485 Hi Z I/P
Input Level
treble lift
Q2 BC547
Q3 BC547
Q4 BC547
Q5 BC547 Post tone gain buffer
Q6 BC547 Phase reversal buffer
Drive boost switch
Bass
500KB
Treble
0.47uF MKT
0.47uF MKT
47nF